Cat® XQP500 Rental Generator Set

Image shown may not reflect actual configuration

Prime 500 kVA (400 kW)
50 Hz
50/60 Hz Switchable Rating

Specifications

Frequency	Voltage	Prime kW (kVA)	Speed rpm
50 Hz	380/220V	400 (500)	1500-1800
	400/230V	400 (500)	1500-1800
	415/240V	400 (500)	1500-1800
60 Hz	380/220V	420 (525)	1500-1800
	440/254V	420 (525)	1500-1800
	480/277V	420 (525)	1500-1800
	220/127V	420 (525)	1500-1800
	240/138V	420 (525)	1500-1800

Cat® C15 ACERT™ Diesel Engine	Metric	Imperial (English)
Configuration	C15 ACERT ATAAC I-6 4-stroke water cooled diesel	
Bore	137 mm	5.39 in
Stroke	171 mm	6.73 in
Displacement	15.2 L	928 in^3
Aspiration	Air-to-air Aftercooled	
Compression Ratio	16:1	
Engine rpm	1500-1800	
Aftercooler Type	ATAAC	
Turbocharger	Single	
Fuel System	MEUI™	
Governor Type	Cat ADEM™ Control System	
Fuel	See Fuel Specifications Table (page 5)	

Benefits & Features

Fuel/Emissions Strategy
- Best Fuel efficiency

Single-source Supplier
- Factory designed and fully prototype tested with certified torsion vibration analysis available
- ISO 9001:2000 compliant facility

Cat C15 ACERT Diesel Engine
- Uses ACERT Technology
- Four-stroke diesel engine combines consistent performance and excellent fuel economy with minimum weight
- ECM electronic engine control

Cat EMCP 4.2B Control Panel
- Fully featured power metering, protective relaying and engine/generator control and monitoring
- Simple, user-friendly interface and navigation
- Single point interface for voltage and 50/60 Hz speed adjustment

Optional Cat EMCP 4.4 Control Panel
- Synchronising capabilities
- Motorised breaker
- Ethernet remote monitoring
- Large screen interface

Cat LC6100 Generator
- Designed to match performance and output characteristics of Cat diesel engines
- Coastal insulation protection
- Self (shunt) excitation

Integrated Voltage Regulator (IVR)
- Three-phase sensing
- Adjustable volts-per-hertz regulation
- Provides precise control, excellent block loading, and constant voltage in the normal operating range

Enclosure
- Galvanized sheet steel construction
- Two coat polyester powder-coated finish
- Five access doors for ease of maintenance
- Secure and safe design with safety glass control panel viewing window with key lock or padlockable access doors
- Fuel fill and battery can only be reached through lockable access doors
- Certified dual point lifting eye and lifting points on the base frame

Rear Customer Access
- Sound isolated control panel with integrated power distribution access
- Robust hook-up point for lugged cable connection
- AC protected by limit switch on distribution door
- Emergency stop on control panel and enclosure

Reduced Environmental Impact
- High fuel efficiency
- 110% spill containment of on-board engine fluids (dual wall tank option)
- Bund level alarm (dual wall tank option)
- TBC dB Sound Pressure @ 75% load 1 M
- TBC dB Sound Pressure @ 75% load 7 M
- Inboard mounted 3-way fuel valve connection for external fuel connection

Standard Equipment

Air Inlet
- Air cleaner, cyclonic/paper with dust cup and service indicator
- Turbocharger and air-to-air aftercooler

Charging System
- 230V, 5A battery charger, enclosed in dust-proof housing
- Charging alternator; 24V, heavy duty with integral regulator and belt guards

Control Panel
- EMCP 4.2B genset mounted digital controller
- Full engine and generator monitoring and fault protection
- 50/60 Hz frequency switch via terminal link
- Panel-mounted emergency stop switch
- IVR with EM10 excitation module

Cooling System
- Variable speed pusher fan
- Package-mounted radiator with vertical air discharge provides 50°C ambient capability at prime @ 50 Hz
- Fully guarded
- Coolant heater, fuse protected, thermostatically controlled, automatically disconnected on start-up
- Coolant drain line with internal brass ball control valve piped to base-frame
- Low coolant level shutdown
- 50% coolant antifreeze with corrosion inhibitor

Distribution System
- Separate load and control sections
- Robust hook-up point for lugged cable connection
- Circuit breaker DC shunt trip coil activated on any monitored engine or electrical fault
- Robust steel enclosure, separate hinged, lockable door with rust-resistant pinned hinges
- Main circuit breaker 4-pole, 800A with 24V DC shunt trip wired to distribution door safety switch; 36 kA-interrupting capacity at 380/415V 50/60 Hz
- Two-wire remote start/stop terminals, 230 VAC auxiliary power connection for rapid starting

Enclosure
- Sound attenuating, galvanized sheet metal enclosure limits overall noise
- Modular panel construction with a welded roof design
- Interior walls, ceilings, and ducts insulated with precision cut noise insulating materials
- Sealed quarter turn compression door latches with key and padlock capabilities
- External side-mounted dual point lifting frame – improved hook-up access
- Enclosure is powder coated white with Cat Rental Power decals

Engine
- Cat C15 ACERT heavy duty diesel engine
- Electronic ADEM A4 controls

Exhaust System
- Integrated spark arresting silencer with flexible connectors, in separate compartment

Fuel System
- Single wall tank – usable volume 207 gal (784 L); run time @ 75% prime load: 9.3 hours
- Dual wall tank – usable volume 255 gal (967 L); run time @ 75% prime load: 13 hours
- Engine-mounted primary and secondary fuel filter
  - Primary filter (10 micron) with integral water separator (330 ml capacity)
  - Secondary 4 micron secondary fuel filter
- Manual pushbutton priming pump
- Auxiliary connections for customer-supplied fuel transfer with 3-way fuel transfer system, internally mounted within the bund area
- Mechanical fuel gauge
- Electronic fuel gauge with control panel display, high and low level fuel warnings
- Configurable bund level sensor, low level warning and high level warning/shutdown

Generator
- LC6114F frame, three-phase, random wound, 12-lead design, self-excited, 2/3 pitch
- Coastal insulation protection
- 230 VAC anti-condensation heater available

Lube System
- On-engine primary and secondary oil filters, filler, and dipstick
- Open crankcase breather with a fumes disposal container, drain located on side of base frame
- Oil drain piped to edge of base frame with internally mounted ball valve
- 500-hour oil change intervals (1000-hour oil change interval option)

Mounting System
- Generator set soft mounted to the heavy duty, fabricated steel base frame
- Heavy duty steel base frame contains integral fuel tank
- Provides 110% spill containment of all engine fluids
- Forklift pockets and heavy duty drag bar with skid plates

Standard Equipment (continued)

Starting System

- Single electric starting motor, 24V
- Two 950 CCA maintenance-free 12V batteries with padlockable single-pole battery isolator
- 230V single-phase jacket water heater with thermostat

General

- Factory testing of standard generator set
- Full manufacturer's warranty, O&M manuals

Fuel Specifications

Specification Standard	Grade Class	Fuel Description
EN590	Grade A to F & Class 0 to 4	European automotive fuel (DERV)
ASTM D975	1-D S15	U.S. special purpose light middle distillate
		15 ppm sulfur
ASTM D975	2-D S15	U.S. special purpose middle distillate
		15 ppm sulfur
JIS K2204	No1	Japanese automotive diesel. Different classes correspond to season and district where used.
	No2	
	No3	
	Special No3	
BS2869	Class A2	Fuel oil for agriculture and industrial engines (Red Diesel)
MIL-DTL-83133 NATO F34	JP-8	Aviation kerosene fuels – acceptable when used with appropriate lubricity additive, and must meet minimum requirements of Caterpillar Specification for Diesel Fuel. The lubricity of these fuels must not exceed wear scar diameter of 0.52 mm (0.02047 inch) as per ISO 12156-1.
MIL-DTL-83133 NATO F35		
MIL-DTL-5624 NATO F44	JP-5	
MIL-DTL-38219 (USAF)	JP-7	
NATO XF63		
ASTM D1655	JET A	
	JET A1	
B5-B7		Blend of biodiesel meeting EN14214 or ASTM D6751 with EN590 or ASTM D975 standard mineral diesel fuels.
B7-B20		

Technical Data

Cat Generator	
Frame size	LC6114F
Pitch	2/3
No. of poles	4
Excitation	Static regulated, brushless, self-excited
Number of bearings	Single bearing, close coupled
Insulation	Class H
Temperature rise	125/40°C
Enclosure	Drip proof IP23
Overspeed capability (% of rated)	25%
Voltage regulator	3-phase sensing with adjustable Volts-per-Hz
Voltage regulation	Less than ± 0.5%
Wave form deviation: Telephone Harmonic Factor (THF) Total Harmonic Content (THC)	 Less than 2% Less than 4%

Materials and specifications are subject to change without notice.

Technical Data (continued)

Generator Set			
	Units	**Prime – 50 Hz EM0430**	**Prime – 60 Hz EM1246**
Power Rating	kW (kVA)	400 (500)	420 (525)
Performance Specification			
Lubricating System Oil pan capacity	L	53	
Fuel System Fuel consumption 100% Load 75% Load 50% Load	 L/hr L/hr L/hr	 102 76.2 54	 107 83 59.3
Cooling System Ambient Capability Engine & Radiator coolant capacity Engine coolant capacity	 °C L L	 50 48 9.5	 45 48 9.5
Air Requirements Combustion air flow	m^3/min	29.9	40
Exhaust System Exhaust flow at rated – dry exhaust Exhaust temperature at rated kW	 m^3/min °C	 26.4 642	 27.8 653.7
Noise Rating** @ 7 meters (23 feet) @ 50% of rating @ 7 meters (23 feet) @ 75% of rating @ 7 meters (23 feet) @ 100% of rating @ 1 meters (23 feet) @ 50% of rating @ 1 meters (23 feet) @ 75% of rating @ 1 meters (23 feet) @ 100% of rating	 dB(A) dB(A) dB(A) dB(A) dB(A) dB(A)	 TBC TBC TBC TBC TBC TBC	 TBC TBC TBC TBC TBC TBC
Non-certified Emission Standards (not to exceed data) NOx CO HC PM	 g/hp-hr g/hp-hr g/hp-hr g/hp-hr	 7.22 0.33 0.01 0.02	 7.23 0.36 0.01 0.02

Technical Data (continued)

Dimensions			
	Length mm (in)	Width mm (in)	Height mm (in)
Generator Set	4930 (194)	1620 (64)	2167 (85)

Weight	
	Weight — kg (lb)
Lube Oil & Coolant — Empty Fuel Tank	5288 (13,176)
Fuel Tank 200 Gallons of Fuel	5628 (13,926)
Full Fuel Tank (Single Wall)	5986 (15,165)

Standard Features and Options

Rental-ready Features

- Forklift pockets
- Integrated heavy duty drag bar with robust skid plate
- Fully certified dual point lift
- Coolant and oil drains piped to base frame
- EMC certified
- Fully certified spark arresting genset
- 50/60 Hz frequency switch via terminal link
- Optimized cable entry for easy hook-up

Available Options

- Synchronising control panel and motorised breakers
- Low voltage 60 Hz configuration with appropriately sized breaker and power cables
- Anti-condensation heater 230 VAC
- Coolant heater 230 VAC
- 24V battery charger
- Permanent Magnet Generator (PMG)
- Earth leakage
- CE labelling (also available for BSFC)
- Lube oil sump pump
- 1000-hour oil change service interval

General Layout Dimensions

Dimensions in millimeters

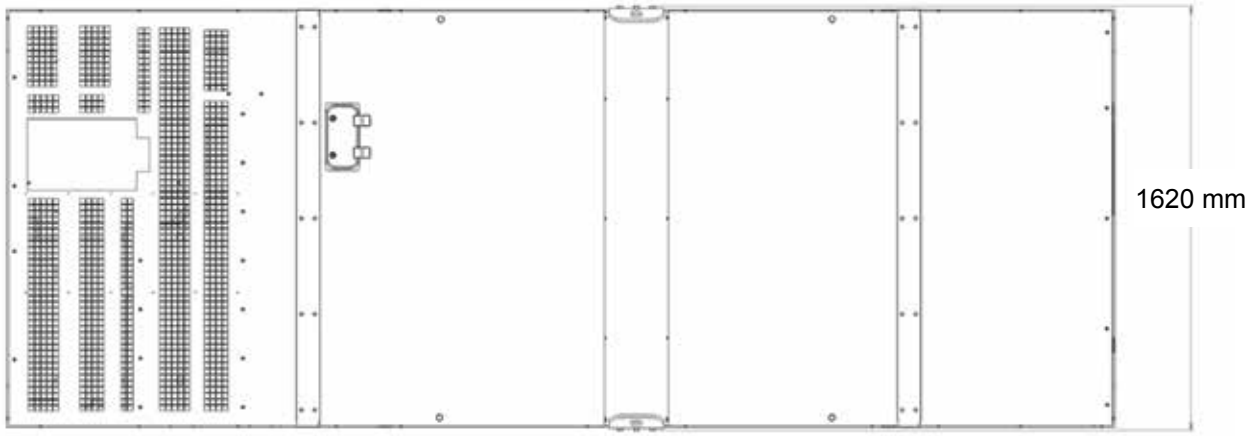

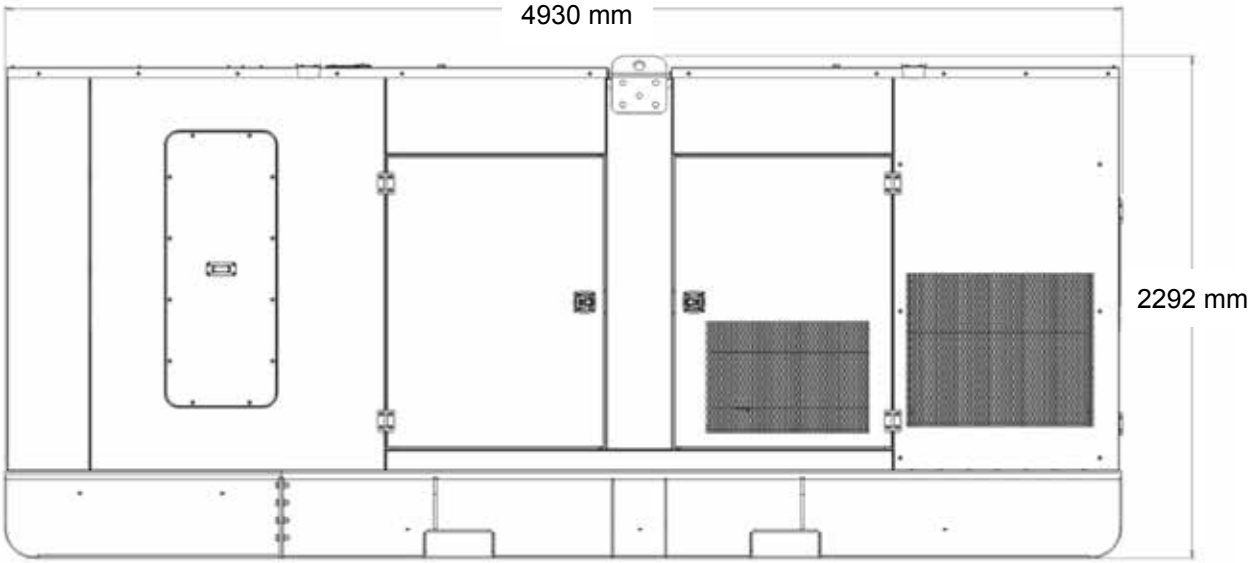

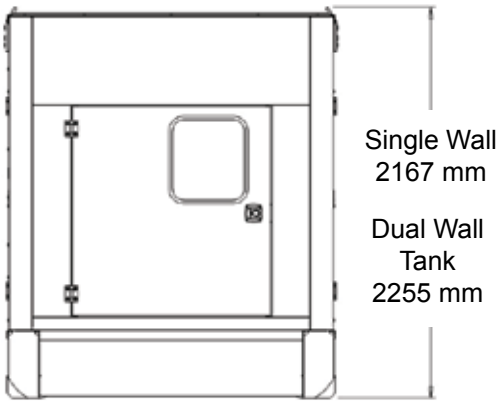

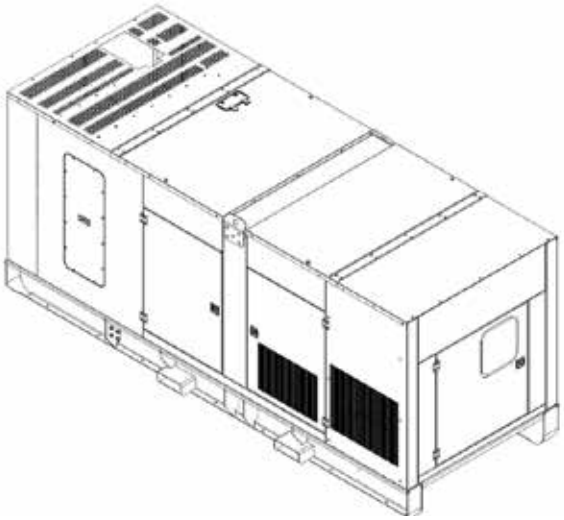

Control Panel and Power Distribution Layout

Item	Description
1	Steel enclosure with hinged, lockable door (not shown)
2	EMCP 4.2B digital genset controller
3	Emergency stop
4	Alarm sounder
5	Cat ET service tool connector
6	Circuit breaker, 4-pole molded case, 800A
7	Main bus connection (bus bars with 14 mm holes)
8	Micro safety switch for bus bar door
9	Manual holder

View shown has enclosure door and breaker door with bus bar viewing window not shown.

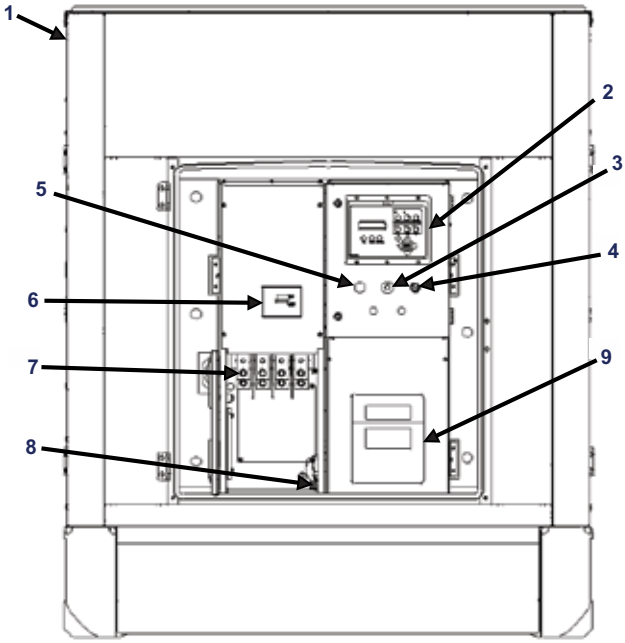

Ratings Definitions and Conditions

Designed to Meet Specifications: ISO 8528, EN 12601, EN 60204-1, ISO 3046, IEC 60034.

Ratings are based on SAE J1349 standard conditions. These ratings also apply at ISO 3046 standard conditions.

Prime – Applicable for supplying continuous electrical power (at variable load) in lieu of commercially purchased power. There is no limitation on the annual hours of operation and the generator can supply 10% overload power.

Fuel rates are based on fuel oil of 35º API [16ºC (60ºF)] gravity having an LHV of 42 780 kJ/kg (18,390 Btu/lb) when used at 29ºC (85ºF) and weighing 838.9 g/liter (7.001 lbs/U.S. gal).

Additional ratings may be available for specific customer requirements, contact your Cat representative for details. For information regarding low sulfur fuel and biodiesel capability, please consult your Cat dealer.

www.Cat.com/rentalpower
©2016 Caterpillar
All rights reserved.

Materials and specifications are subject to change without notice.
The International System of Units (SI) is used in this publication.

CAT, CATERPILLAR, their respective logos, ACERT, ADEM, MEUI, “Caterpillar Yellow”, the “Power Edge” trade dress as well as corporate and product identity used herein, are trademarks of Caterpillar and may not be used without permission.